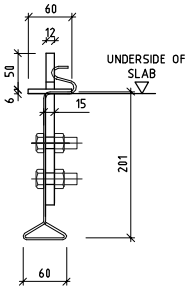

SECTION A-A
1:5

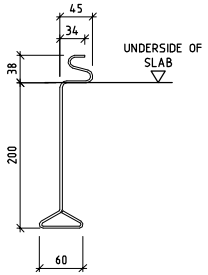

SECTION B-B
1:5

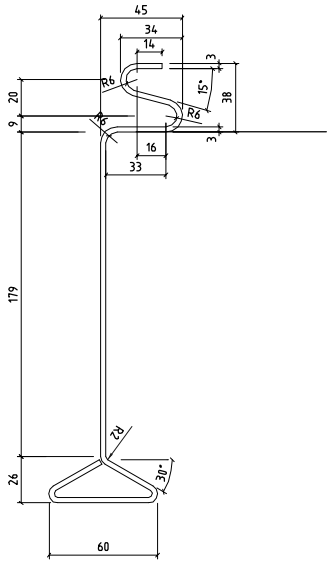

TYPICAL SECTION
1:5

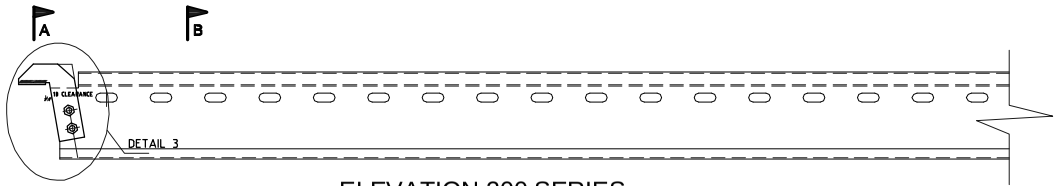

ELEVATION 200 SERIES
1:10

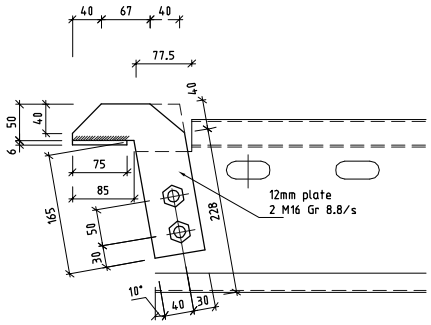

DETAIL 3
1:5

these drawings remain the property of Speedfloor Holdings ltd and should not be copied in any form or passed on to a third party without prior written consent

SPEEDFLOOR

© SPEEDFLOOR HOLDINGS LTD

PROJECT SPEEDFLOOR JOISTS 200 SERIES	
DRAWING TITLE JOIST ELEVATION AND DETAILS	
DATE Oct 2005	SCALE AS SHOWN
DESIGNED SS	APPROVED
DRAWN KM	CAD FILENAME
DRAWING No. S03 REV 1	